Delta

Straight Inclined Platform Lift

Planning Guide

savaria®

Applicable Codes:

ASME A17.1
CAN/CSA B355
ASME A18.1
CAN/CSA B613

Copyright © 2020
Savaria Concord Lifts, Inc.
All rights reserved.

Printed in Canada

Purpose of This Guide

This guide assists architects, contractors, and lift professionals to incorporate the DELTA Straight Inclined Platform Lift into a residential or public building design. The design and manufacture of the DELTA Inclined Platform Lift meets the requirements of the following codes and standards:

- ASME A18.1-2003 Section 3 (Public)
- ASME A18.1-2005 Section 3 (Public)
- ASME A18.1-2008 Section 3 (Public)
- ASME A18.1-2011 Section 3 (Public)
- ASME A18.1-2014 Section 3 (Public)
- ASME A18.1-2017 Section 3 (Public)
- ASME A18.1-2003 Section 6 (Private)
- ASME A18.1-2005 Section 6 (Private)
- ASME A18.1-2008 Section 6 (Private)
- ASME A18.1-2011 Section 6 (Private)
- ASME A18.1-2014 Section 6 (Private)
- ASME A18.1-2017 Section 6 (Private)
- ASME A17.1-1996 Section 20 (Public)
- ASME A17.1-1996 Section 21 (Private)
- CAN/CSA B355 S1-02 (Public)
- CAN/CSA-B355-09 (Public)
- CAN/CSA B613-2000 (Private)

We recommend that you contact your local authority having jurisdiction to ensure that you adhere to all local rules, regulations, and fire regulations pertaining to inclined platform lifts.
IMPORTANT: This Planning Guide provides nominal dimensions and specifications useful for the initial planning of an inclined platform lift project. **Dimensions and specifications are subject to change without notice due to continually evolving code and product applications.**
Before beginning actual construction, please consult Savaria or the authorized Savaria dealer in your area to ensure you receive your site-specific installation drawings with the dimensions and specifications for your project.
Visit our website for the most recent drawings and dimensions.

How to Use This Guide

1. Determine your client's intended use of the lift.
2. Determine the local code requirements.
3. Determine the site installation parameters.
4. Plan for electrical requirements.

History

February 6, 2012 – Initial release
February 14, 2012 – Corrected codes above
March 21, 2012 – Various updates throughout
March 27, 2012 – Added "(overspeed)" to Safety brake listing in specification table on page 6
September 5, 2012 – Added note to drawings on pages 21, 24 and 27
September 17, 2012 – Revised charts on page 29
January 8, 2013 – Added minimum travel on page 6; updated NOTE in drawings on page 18, 21, 24, and 27; revised drawing and chart on pages 28 and 29
April 30, 2013 – Updated drawings on pages 7 and 9
May 1, 2013 – Updated drawings on pages 18, 21, 24 and 27
May 28, 2013 – Added noise level to specs table on page 3; updated drawing(page 28) and tables (page 29)
June10, 2013 – Revised guide rail mounting information on page 10; added loads drawing on page 15
September 16, 2013 – revised travel speed in specs table on page 6
October 2, 2013 – revised drawings throughout
December 19, 2013 – added note to Guide Rail Mounting drawing on page 9
January 23, 2014 – new photos on page 8; added new section "Support post calculations" on page 10; revised drawing on page 12; added note on page 12 re: installing to local requirements; added NOTE on pages 19, 22, 25, 28, and 31 re: reducing width if 90-degree vertical flap is ordered
March 12, 2014 – revised Specifications table on page 6
May 14, 2014 – specified optional manual folding seat on pages 5, 6, and 7
August 29, 2014 – revised Note on pages 19, 22, 25, 28, 31 re: reduce width if 90-degree flap is ordered
November 5, 2014 – revised Applicable Codes on page 3
November 14, 2014 – revised NOTE on pages 19, 22, 25, 28, and 31
January 20, 2015 – added 2014 code in section above
September 15, 2015 – added seat dimension drawing on page 32
September 24, 2015 – added Daily Cycle to specifications table on page 6
March 1, 2016 – revised drawing at bottom of page 31
March 6, 2017 – revised page 15 re: charger box
September 19, 2017 – revised Note on page 9
September 27, 2018 – added ASME 18.1-2017 to code list on this page
November 1, 2018 - Added important note on page 15 re: installation of infill panels/barrier
August 2, 2019 - Revised Note on pages 20, 23, 26, 29 and 32
January 15, 2020 - Added Savaria Link option to specs table, page 6 and provisions by others, page 15
April 16, 2020 - Various revisions/additions throughout
June 29 2022 - Miscellaneous section added, updated images in Miscellaneous section
August 2 2022 - Updated cover

Contents

Description of the lift . . . 5
Features and benefits . . . 5
Specifications of the lift . . . 6
Lift components . . . 7
Drive unit . . . 8
Lift controls . . . 8
Guide rails . . . 9
Guide rail mounting . . . 9
Guide rail mounting examples . . . 10
Support post calculations . . . 11
- Horizontal reactions . . . 11
- Platform moment on rails . . . 12

How the system works . . . 13
Safety features . . . 14
- Obstruction sensors . . . 14
- Safety arms and platform ramps . . . 14
- Safety brake (overspeed) . . . 14
- Limit switches . . . 14
- Emergency STOP button . . . 14
- Platform key switch . . . 14
- Manual lowering device . . . 14

Site verification . . . 15
- Stairway . . . 15
- Minimum overhead clearance . . . 15
- Construction site . . . 15
- Dimensions . . . 15
- Installation . . . 15
- Provisions by others - infill panels . . . 16
- Provisions by others - Savaria Link option . . . 16

Electrical requirements . . . 17
- General . . . 17
- Main power supply . . . 17
- Lighting . . . 17

Structural details . . . 18
- Floor/support wall loads . . . 18

Clearance Requirements – Sheet 1 . . . 19
Clearance Requirements – Sheet 2 . . . 20
Platform inline – 30.5 x 49.25" (775 x 1250 mm) Sheet 1 . . . 21
Platform 90 degree – 30.5 x 49.25" (775 x 1250 mm) Sheet 2 . . . 22
Platform – 30.5 x 49.25" (775 x 1250 mm) Sheet 3 . . . 23
Platform inline – 28.5 x 44" (724 x 1118 mm) Sheet 1 . . . 24
Platform 90 degree – 28.5 x 44" (724 x 1118 mm) Sheet 2 . . . 25
Platform – 28.5 x 44" (724 x 1118 mm) Sheet 3 . . . 26
Platform inline – 28.4 x 35.5" (720 x 900 mm) Sheet 1 . . . 27
Platform 90 degree – 28.4 x 35.5" (720 x 900 mm) Sheet 2 . . . 28
Platform – 28.4 x 35.5" (720 x 900 mm) Sheet 3 . . . 29
Platform inline – 26.5 x 36" (673 x 914 mm) Sheet 1 . . . 30
Platform 90 degree – 26.5 x 36" (673 x 914 mm) Sheet 2 . . . 31
Platform – 26.5 x 36" (673 x 914 mm) Sheet 3 . . . 32
Platform inline – 32 x 47.25" (810 x 1200 mm) Sheet 1 (Australia Only) . . . 33
Platform 90 degree – 32 x 47.25" (810 x 1200 mm) Sheet 2 (Australia Only) . . . 34
Platform – 32 x 47.25" (810 x 1200 mm) Sheet 3 (Australia Only) . . . 35
Seat dimensions . . . 36
Miscellaneous. . . . 37

Description of the lift

The DELTA Straight Inclined Platform Lift is an accessibility device used to provide access over straight-run stairs in commercial or residential settings.

The lift will transport a passenger either sitting in a wheelchair or on an optional manual folding seat.

The unit travels along the rail at a comfortable speed of 20 feet per minute (0.1 metres per second) up and down the stairway.

The DELTA is easy to operate using the on-board pendant control buttons. When the lift is not in use, it can be parked and folded up allowing access to the stairs.

The lift is suitable for indoor use, and can be factory-built for left- or right-side rail installations.

Features and benefits

- Major building renovations are usually not required as the DELTA is installed on a modular guide rail system that follows along an existing stairway. The rails will be securely fastened to a supporting wall, the stairs, or both.
- The space-saving design of the platform and the rail system allows the platform to fit into narrow staircases.
- The lift can be parked at the top or bottom of the staircase.
- The drive unit for the lift is part of the carriage assembly.
- A robust platform motor operates folding and unfolding of the platform, arms and ramps.

Specifications of the lift

DELTA Specifications

Specification	Data
Platform capacity	550 lb (250 kg); optional 660 lb (300 kg)
Seat capacity	One person in wheelchair or sitting on the optional manual folding seat; seat capacity is 330 lb (150 kg)
Gradient	Constant, 20° to 45°
Platform sizes	30.5" x 49.25" (775mm x 1250 mm) 28.5" x 44" (724 mm x 1118 mm) 28.35" x 35.43" (720 mm x 900 mm) 26.5" x 36" (673 mm x 914 mm)
Travel speed	15 feet/minute (0.075 metres/second) to 20 feet/minute (0.1 metres/second) Note that the speed may vary depending on the angle of the stairs
Travel direction	Forward/backward
Minimum travel	8" (20 cm)
Maximum travel	80 ft (24 m)
Temperature	32 °F to 104 °F (0 °C to 40 °C)
Power supply	24V DC (battery system); 120V AC for charger
Motor	0.66 hp (0.5 kW)
Noise level (for typical installation)	58.3 dBA (up direction); 59.1 dBA (down direction) Measured at a height of 1m, distance of 1m, in front of the motor with all panels on
Daily cycle	Normal: 10 Heavy: 20 Excessive: 30 Maximum starts in 1 hour on standard installation: 5 NOTE: Please consult your Sales Representative if there a chance you may exceed these amounts.
Pendant control buttons	Two constant-pressure directional buttons to move the lift up or down the stairway and an emergency STOP button to stop the lift in an emergency
Remote call station buttons	Used to call/send the lift and fold/unfold the platform (if automatic)
Platform control panel	Emergency STOP button to bring the lift to an immediate stop Key switch to enable use of the pendant control buttons
Standard features	Pendant for directional control Constant-pressure buttons for directional control (optional) Manual lowering capability (using handwheel) Safety arms Auto and manual folding platform (fold/unfold platform by hand) Limit switches No machine room required Emergency stop button Handrail
Safety features	Edge sensors Underpan sensors Safety brake (overspeed) Safety arms Platform ramps Emergency stop button Limit switches Manual operation (using handwheel) Lockable master power switch
Options	Savaria Link remote monitoring

Lift components

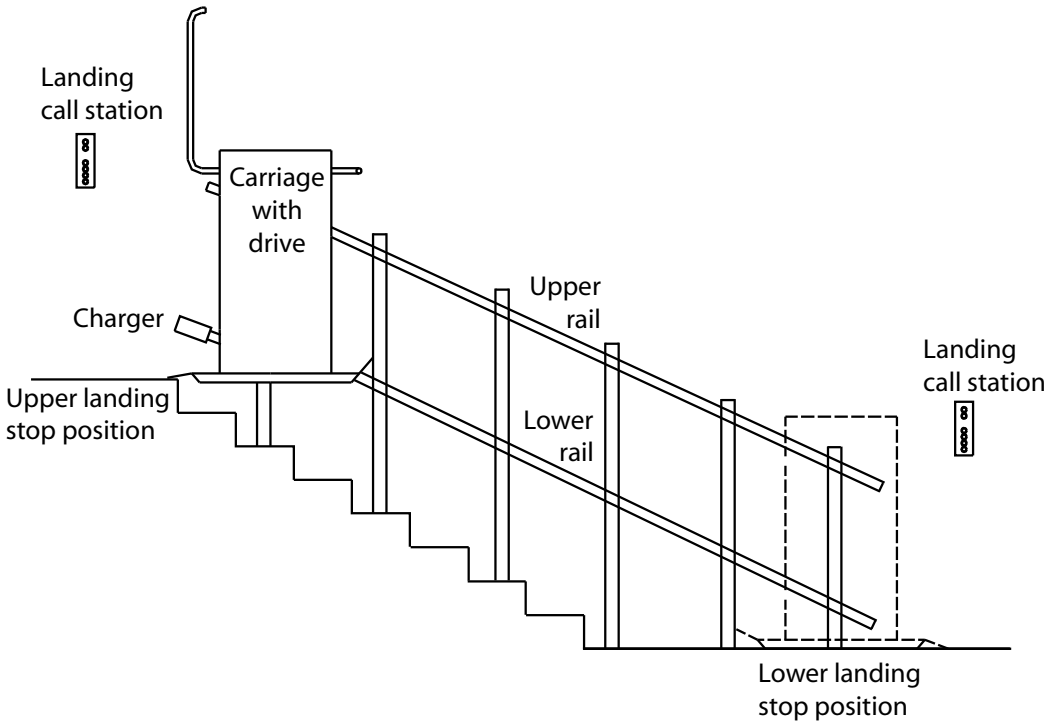

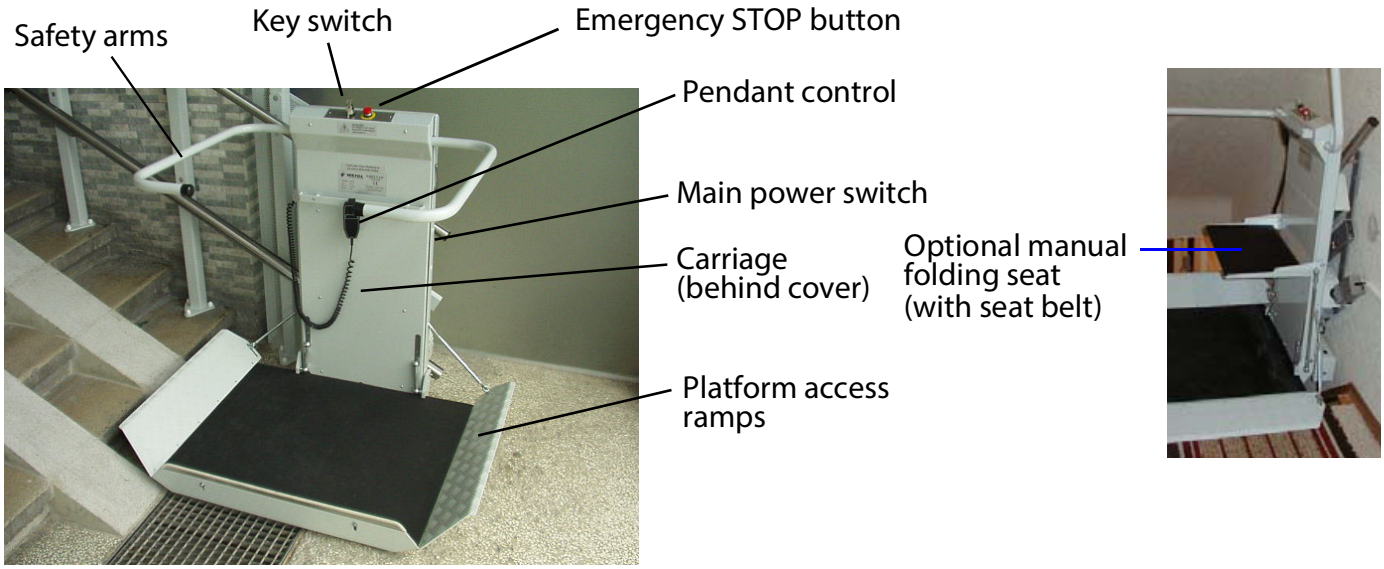

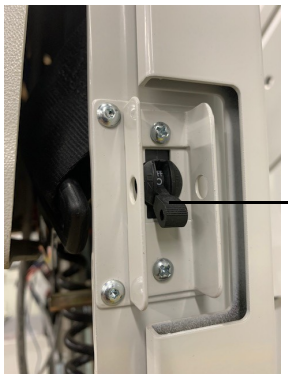

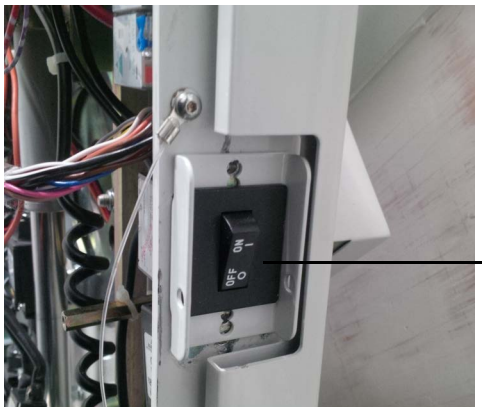

Drive unit

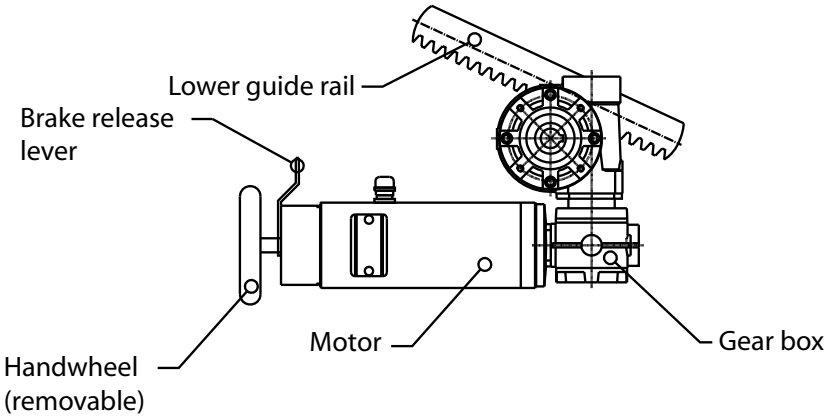

Lift controls

PLATFORM PENDANT

The on-board, hand-held pendant has constant-pressure **UP/DOWN** buttons allowing you to move the platform up or down the stairway. There is also a red emergency **STOP** button.

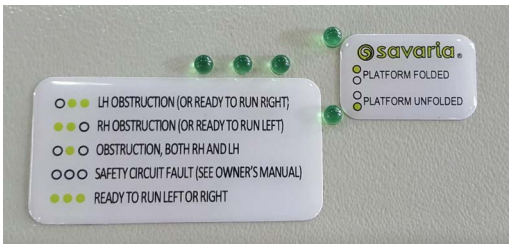

DIAGNOSTIC DISPLAY

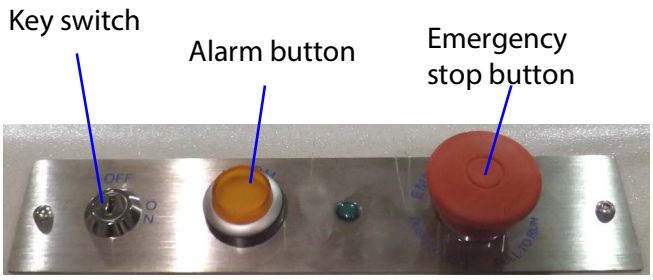

PLATFORM CONTROL PANEL

Key switch – use to activate/deactivate the platform controls (2252 off removable key switch)
Alarm button (if equipped) – use in an emergency to sound an audible alarm
Emergency STOP button – use in an emergency to stop the lift

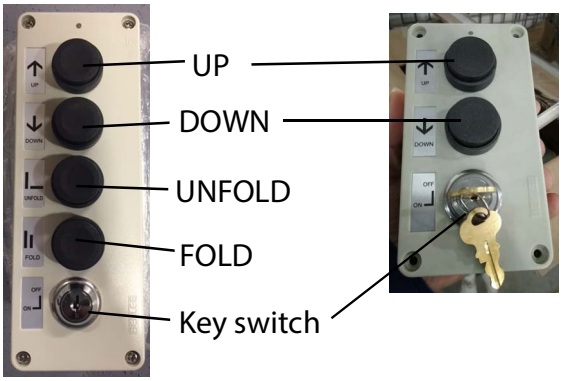

CALL STATIONS (AUTO & MANUAL)

AUDIO VISUAL LIGHT (OPTIONAL)

UP/DOWN buttons – use to call the lift to the required landing
FOLD/UNFOLD buttons – use to fold or unfold the platform and raise or lower the ramps
KEY SWITCH (optional) – use to activate/de-activate the call station controls

Guide rails

The lift travels up and down the stairway along two guide rails – an upper rail and a lower rail. The mounting location of the rails depends on the platform size and the angle of the stairs.

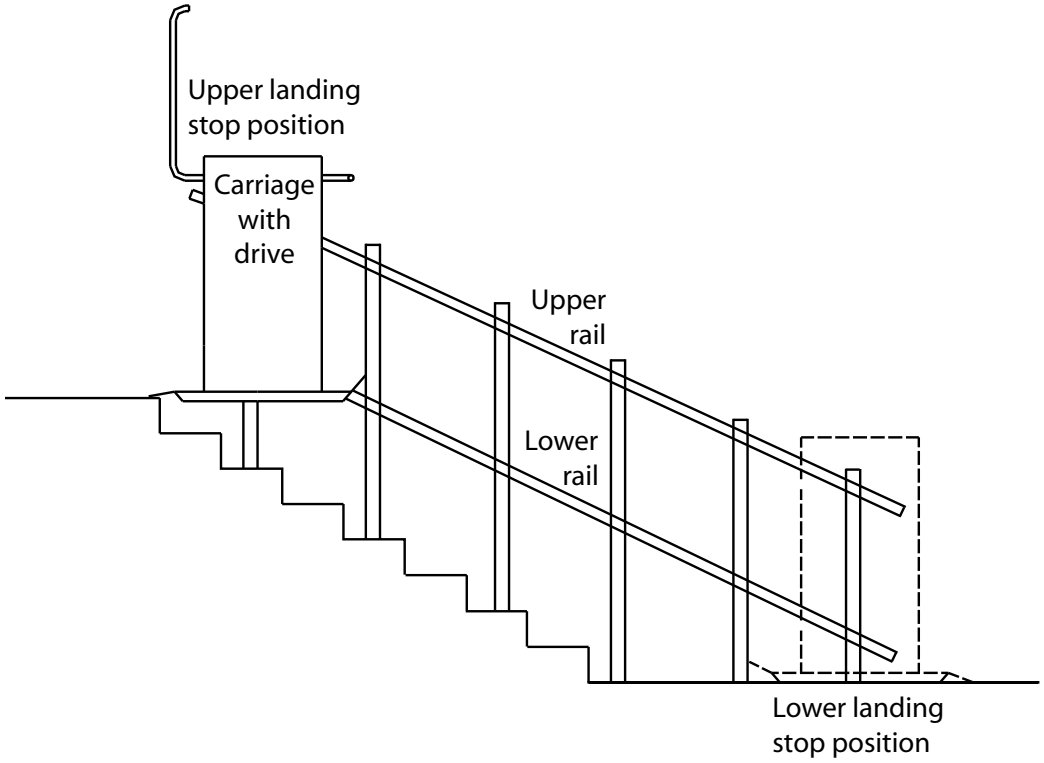

Guide rail mounting

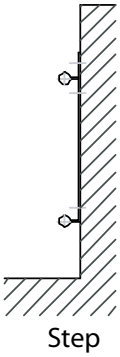

WALL MOUNTED

NOTE: When installing the rails directly to a wall, the wall MUST be plumb and square to within 1/8" or the rail must be shimmed. Otherwise, the ride quality will be compromised (vibration). The walls must not flex under load, as this too will affect the ride. We recommend doubling up the 2x4s in the wall, then installing 3/4" plywood to the studs, and then securing the rails to the plywood. Also, ensure that the upper and lower parts of the wall are securely fastened.

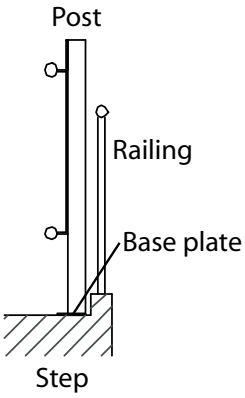

POST MOUNTED ON STEPS

Guide rail mounting examples

WALL MOUNTED

POST MOUNTED (1)

POST MOUNTED (2)

Support post calculations

CONDITIONS: Floor- and step-mounted with a horizontal wall anchor at each post.

Free body diagram of support post

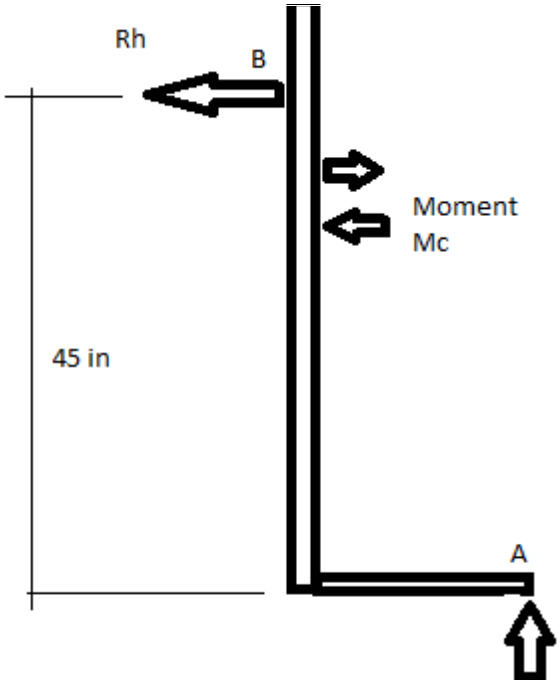

Horizontal reactions

$$\sum M/_A = 0$$

$$R_H \cdot 45\ in = M_c$$

$$R_H = \frac{M_c}{45\ in}$$

$$R_H = \frac{44\,415\ lb - in}{45\ in}$$

$$R_H = 987\ lb$$

Platform moment on rails

$$M_c = 2 \cdot F \cdot d = 2 \cdot 945\ lb \cdot 23{,}5\ in$$

$$M_c = 44\,415\ lb - in$$

Where $F = F_h = 945\ lb\ (Force\ acting\ on\ the\ rails)$

and

$d = distance\ between\ rails$: 23,5$in$

With a safety factor of SF = 2

Therefore the reacting horizontal pulling force on the wall for a single support post will be (including a safety factor of 2):

$$\boldsymbol{R_H = 987\ lb}$$

Reacting vertical forces on the steps will remain the same at 3,500 lb approximately.

Since the Delta platform lift is mounted over several support posts (6 posts minimum) onto a rigid system of rails, we can consider this value of R_H to be very conservative.

Each support post needs to be anchored into the wall if the base plates are not rigidly anchored into the steps.

How the system works

The Delta carriage/platform assembly travels along a guide rail system that is custom designed for each site. This railway consists of an upper rail and a lower rail.

When the motor powers the drive system, the rack and pinion drive wheel engages in the rack of the lower guide rail moving the lift up or down the stairs.

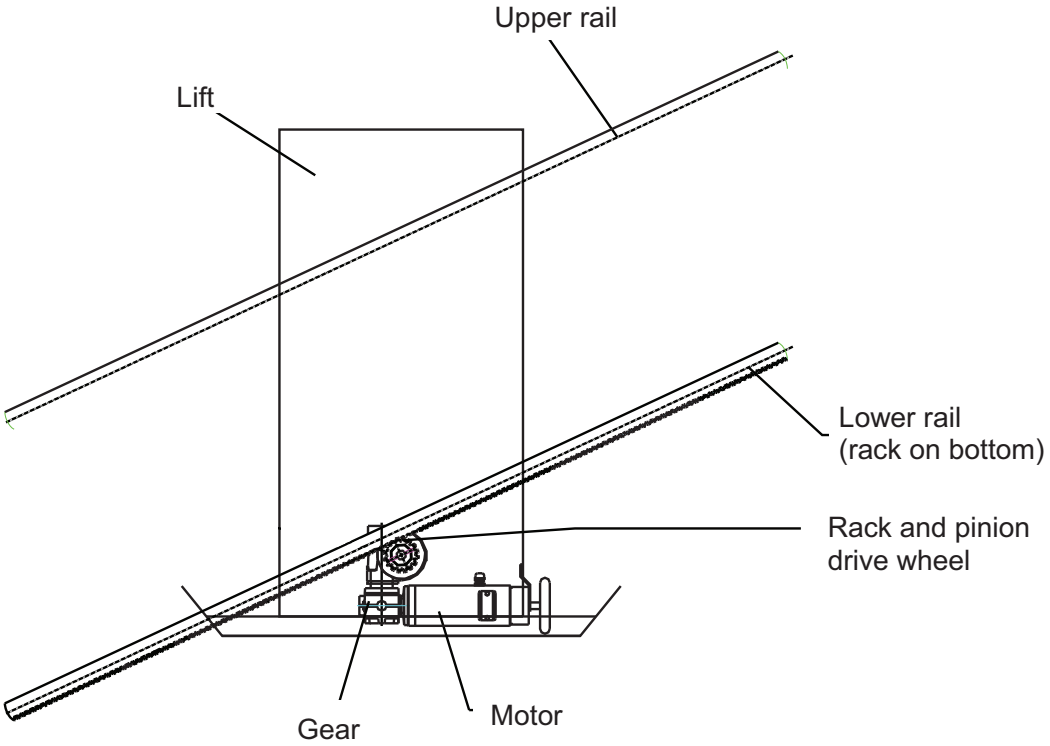

Safety features

Obstruction sensors

During travel, the edges of the platform ramp and the carriage of the lift are protected by sensors which stop the lift if it touches an obstacle.

There are also safety underpan sensors to detect an obstacle underneath the platform and carriage and stop the lift.

Safety arms and platform ramps

While in motion, the platform is protected by two safety arms. The platform is also protected by two platform side ramps which have the dual function of facilitating access to the lift at the floors (open position) and of retaining the wheelchair while the lift is in motion (safety position).

Before the lift leaves the floor, the safety arms must be down and the platform ramps must be up.

If the underpan or platform ramps encounter an obstacle as they move into position, a microswitch is tripped, stopping the lift. You can drive away from the obstacle in the other direction in order to remove the obstacle.

Safety brake (overspeed)

The lift is equipped with a mechanical safety brake. It engages if a drive component fails, or if the normal downward travel speed is exceeded by a preset amount. Application of the brake quickly brings the lift to a stop.

Limit switches

The upper and lower limit switches allow the lift to stop automatically in the correct landing position at the upper or lower end of the staircase. If the upper or lower limit switch fails, the additional final safety limit switch stops the unit.

Emergency STOP button

There is a red emergency STOP button located on the platform control panel and on the handheld pendant which can be pressed in an emergency to stop the lift.

Platform key switch

The key switch is located on the platform control panel and is used to activate/de-activate the platform pendant controls.

Manual lowering device

You can use a manual handwheel by inserting it on the motor shaft to bring the lift to the next landing in the event of an emergency.

Site verification

Stairway

Due to close running clearances, the Owner/Agent must ensure that the stairs (where provided) are level, plumb (+/-1/8" (3 mm)) and square and are in accordance with the dimensions specified on the site-specific plan drawings.

Minimum overhead clearance

The Owner/Agent must ensure the minimum overhead clearance is in compliance with codes.

Construction site

The Owner/Agent is responsible for all masonry, carpentry and drywall work as required, and for patching and finishing (including painting) all areas where walls/floors may need to be cut, drilled or altered in any way to permit the proper installation of the lift.

Dimensions

The Contractor/Customer must verify all dimensions on the site-specific plan drawings and report any discrepancies to the Agent or Distributor.

Installation

The equipment must be installed by a qualified technician in compliance with the codes identified on the front cover of this manual.

The conformity for access to the platform is the distributor's responsibility.

NOTE: The installation company must install to all local requirements even if they are not listed in this manual.

Provisions by others - infill panels

IMPORTANT NOTE

Upon completion of installation when the back of the rail is exposed, infill panels must be installed between the support posts, or a constructed barrier or wall must be installed behind the rail (see the illustration below). This will prevent access to the back of the rail during operation.

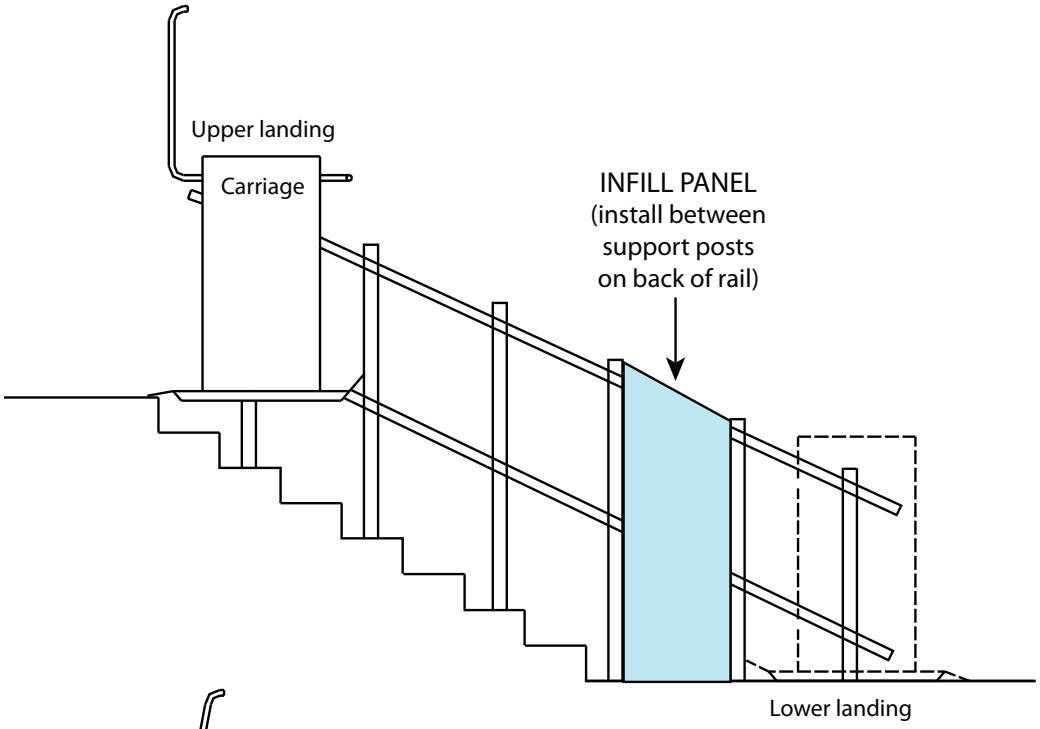

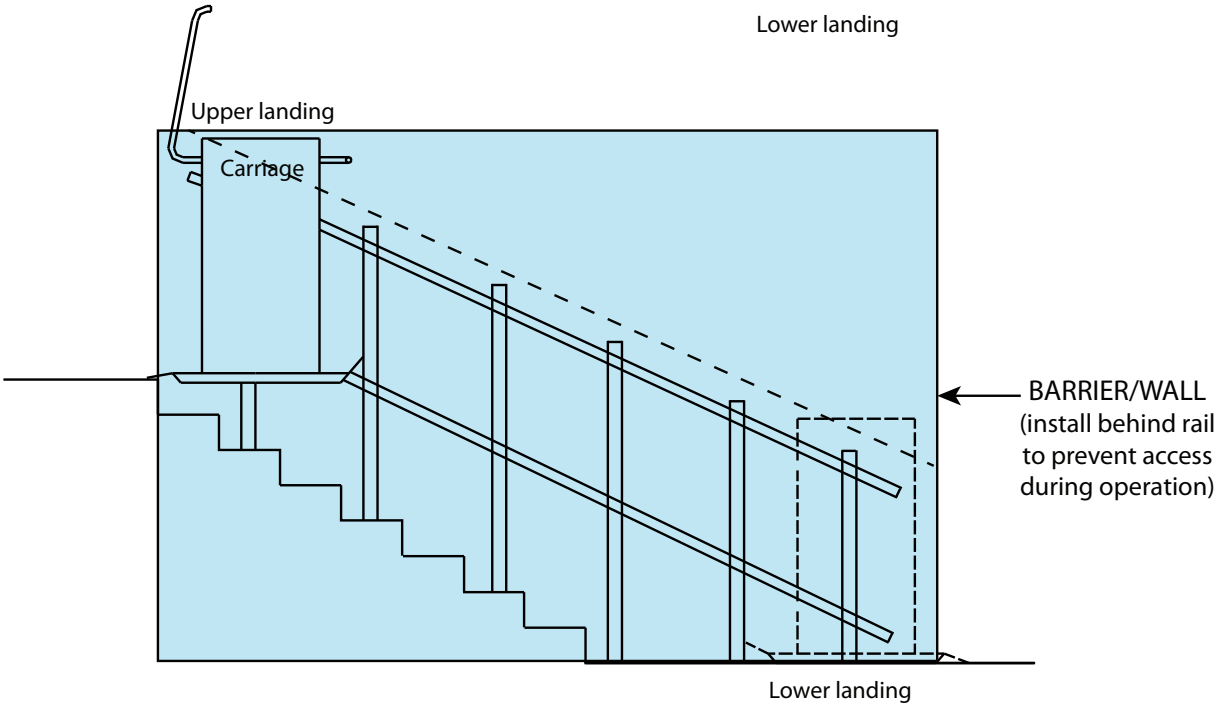

Provisions by others - Savaria Link option

If you have the Savaria Link Ethernet remote monitoring option, ensure that you have an Ethernet connection with Internet capability in the vicinity of the unit's controller.

If you have the Savaria Link Wireless remote monitoring option, ensure that you have a wireless signal with Internet capability in the vicinity of the unit's controller.

Electrical requirements

General

Electrical equipment and wiring to comply with Section 38 of CSA C22.1 (Canada) or Section 620 of NEC ANSI/NFPA 70 (USA).

Main power supply

110 VAC, single-phrase 60 Hz, in a dedicated 15 amp circuit through a fused disconnect. The power will be supplied to a 24V DC battery charger.

6-ft cable from charger to outlet and 5-ft cable from charger to charging station.

Contractor/customer to provide two 14 AWG conductors and a ground conductor between the fused disconnect contact and the connection box.

For public applications, Savaria provides an electrical box to house the charger (see below). This charger box is to be mounted remotely in sight of the lift.

Provided by others

Provided by Savaria

Lighting

Contractor/customer to provide lighting. Lighting must be a minimum of 100 Lux at the platform and landings and must have a switch and electrical GFCI outlet.

Contractor/customer to provide emergency lighting. Emergency lighting of 2 Lux must be provided for a minimum of one hour on the platform along the travel route.

Structural details

Floor/support wall loads

A qualified professional must ensure that the building and stairway will safely support all loads imposed by the lift equipment. Adequate structural support must be provided at the top landing, bottom landing and throughout the supporting wall along the stairs.

The pull-out force on the supporting wall will vary depending on the type of rail mounting used (wall brackets or support posts on the steps). Refer to the previous illustration of the guide rail mounting configurations.

All wood studs in the supporting wall must be anchored in the ceiling and the floor to meet the pull-out force requirements. Wood studs must be placed at 16″ (404 mm) centres (minimum), solidly anchored in the floor and ceiling.

The floor load will vary depending on the type of rail mounting used (wall brackets or support posts on the steps).

Where required, the rail must be securely fastened to the structural support wall.

POST MOUNTED

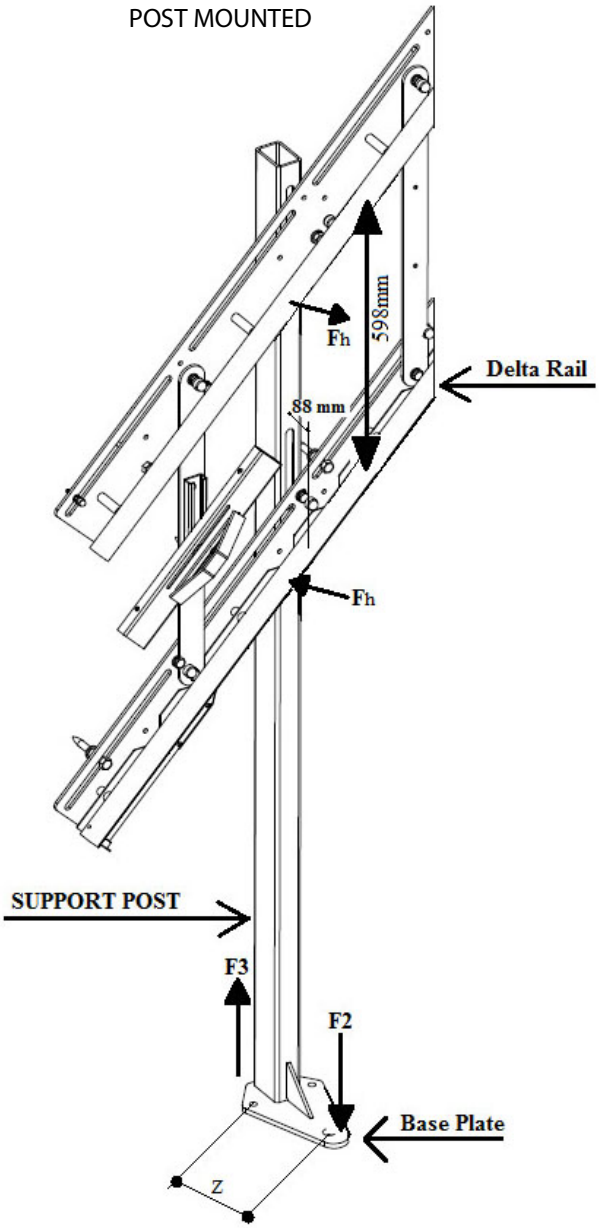

WALL MOUNTED

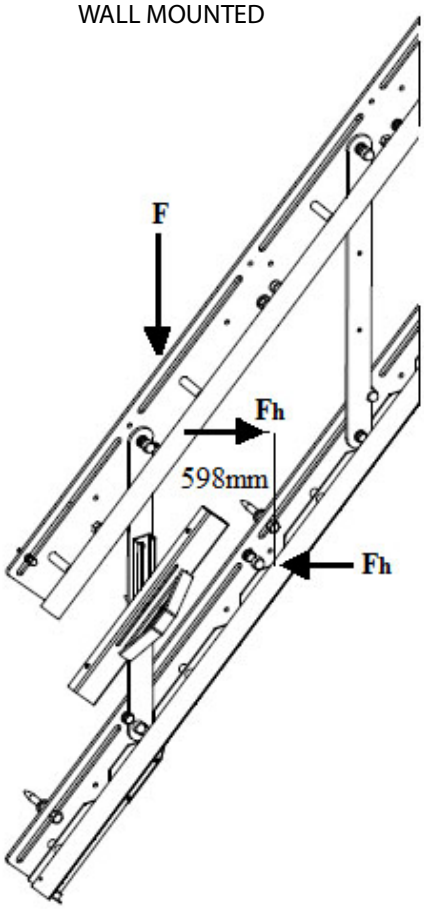

Z = 150 mm (5.91″)
F = 5300 N (1191.5 lbs)
Fh = 4200 N (944.2 lbs)
F2 = 19,293 N (4337.33 lbs)
F3 = 13,993 N (3145.8 lbs)

Clearance Requirements – Sheet 1

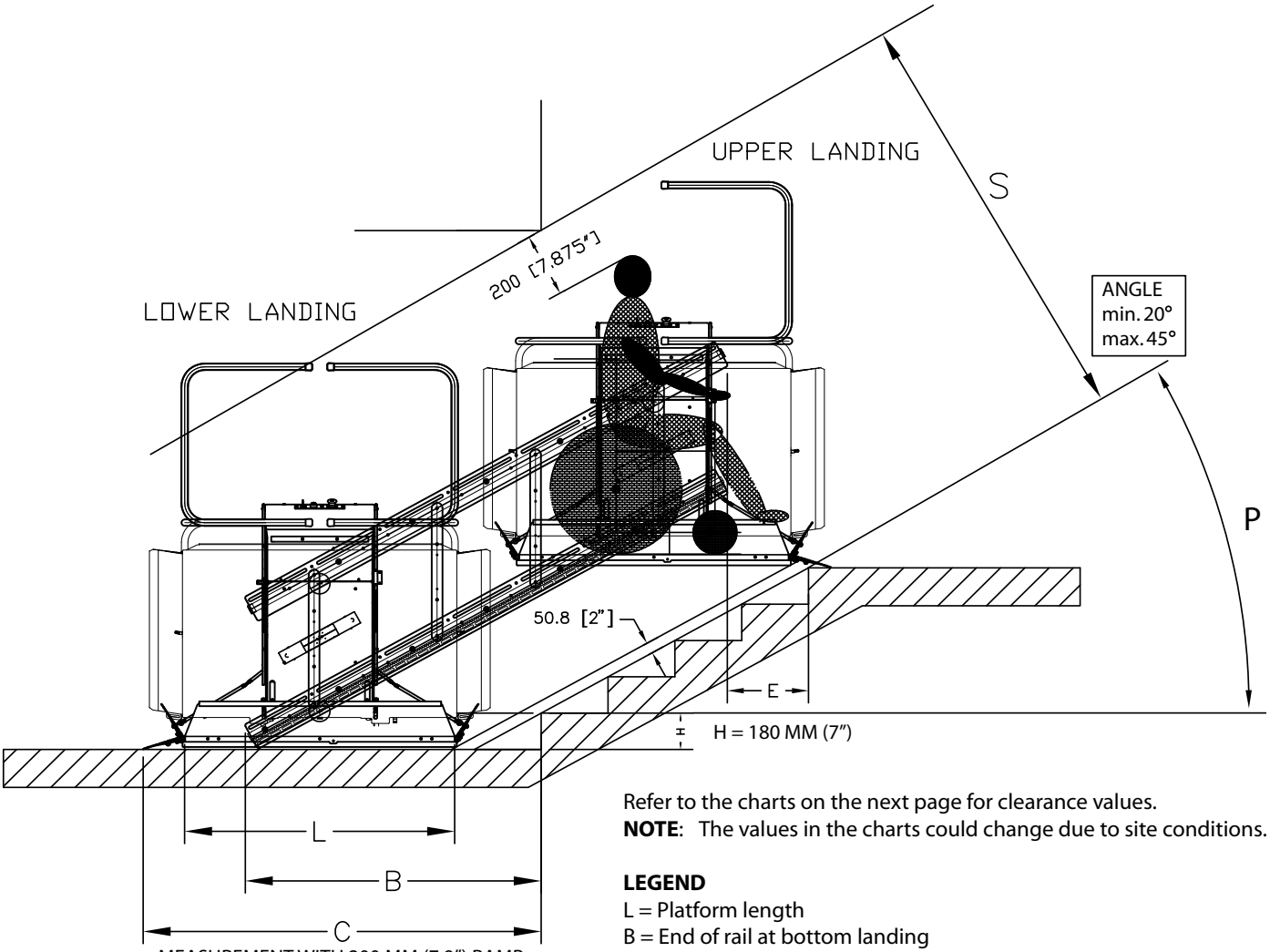

MEASUREMENT WITH 200 MM (7.9") RAMP

Refer to the charts on the next page for clearance values.
NOTE: The values in the charts could change due to site conditions.

LEGEND
L = Platform length
B = End of rail at bottom landing
C = End of platform at bottom landing
E = Rail distance at top landing
P = Angle
S = Overhead minimum (see local code for details/restrictions)

NOTE: See clearances on next page.

Clearance Requirements – Sheet 2

L = 900 mm (35.5")

GRADIENT (P)	B	C	E	S (US CODE)	S (CAN. CODE)
	inch/mm	inch/mm	inch/mm	inch/mm	inch/mm
20°	60/1524	66.38/1686	-0.25/-6.4	72.38/1838	65.38/1661
25°	49.75/1264	59.75/1518	-1.625/-41.3	73.3/1862	64.88/1648
30°	47/1194	59.25/1505	-0.25/-6.4	73.6/1869	63.88/1623
35°	42.75/1086	56.5/1435	-1/-25.4	73.38/1864	62.31/1583
40°	39.88/1013	54.88/1394	-1.875/-47.6	72.5/1842	60.38/1534
45°	38.75/984	54.5/1384	-2.88/-73.2	72/1829	58.25/180

L = 914 mm (36")

GRADIENT (P)	B	C	E	S (US CODE)	S (CAN. CODE)
	inch/mm	inch/mm	inch/mm	inch/mm	inch/mm
20°	60.25/1530	67.125/1705	0	72.63/1845	65.63/1667
25°	50/1270	60.38/1534	-1.88/-47.8	73.56/1868	65/1651
30°	47.38/1203	59.75/1518	-0.6/-15.2	73.88/1877	64/1626
35°	43/1092	57/1448	-1.18/-30	73.63/1870	62.5/1588
40°	39.75/1010	55.38/1407	-1.75/-44.5	72.88/1851	60.25/1530
45°	39/991	55/1397	-3.25/-82.6	72/1829	58.75/1492

L = 1118 mm (44")

GRADIENT (P)	B	C	E	S (US CODE)	S (CAN. CODE)
	inch/mm	inch/mm	inch/mm	inch/mm	inch/mm
20°	64.125/1629	75.125/1908	-4/-101.6	75.38/1915	66.88/1699
25°	54/1372	68.5/1740	-5.88/-149.4	76.88/1953	66.63/1692
30°	51.25/1302	67.75/1721	-4.5/-114.3	77.88/1978	66/1676
35°	47/1194	65/1651	-5.19/-131.8	78.125/1984	64.75/1645
40°	44.25/1124	63.63/1616	-6.19/-157.2	78/1981	63.125/1603
45°	43/1092	63.25/1607	-7.25/=184.2	77.5/1968	61.5/1562

L = 1250 mm (49.25")

GRADIENT (P)	B	C	E	S (US CODE)	S (CAN. CODE)
	inch/mm	inch/mm	inch/mm	inch/mm	inch/mm
20°	66.75/1695	80.38/2042	-6.5/-165.1	77.125/1959	67.75/1721
25°	56.63/1438	73.75/1873	-8.1/-205.7	79.125/2010	67.75/1721
30°	54/1372	73/1854	-7.75/-196.9	80.5/2045	67.25/1708
35°	49.63/1261	70.25/1784	-7.875/-200	81.13/2061	66.25/1683
40°	46.75/1187	68.88/1750	-8.81/-223.8	81.38/2067	64.75/1645
45°	45.38/1153	68.25/1734	-9.75/-247.7	81/2057	63.25/1607

VERTICAL BOTTOM AND TOP LANDING CLEARANCES

METRIC	IMPERIAL
2000 mm	78.75"

Platform inline – 30.5 x 49.25" (775 x 1250 mm) Sheet 1

PLF_DELTA (775X1250)
STRAIGHT ENTRANCE

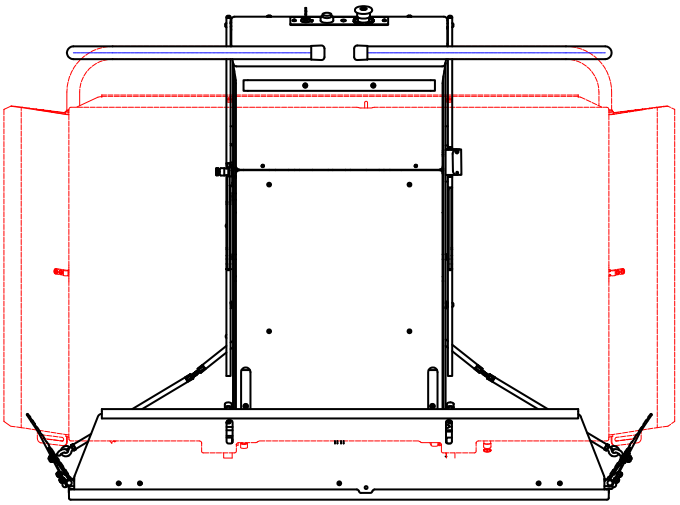

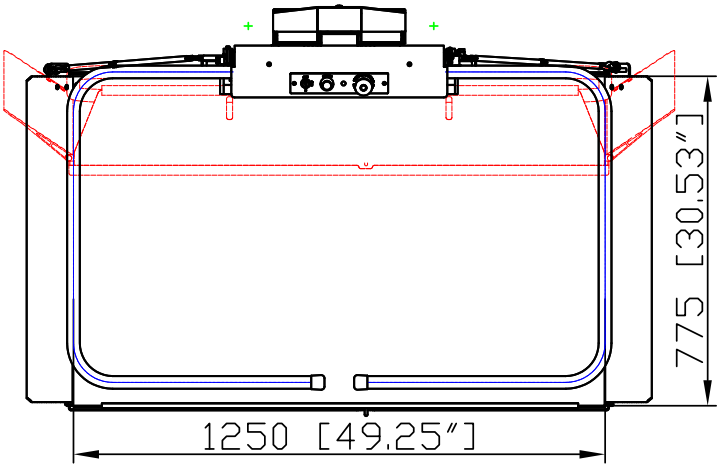

Platform 90 degree – 30.5 x 49.25" (775 x 1250 mm) Sheet 2

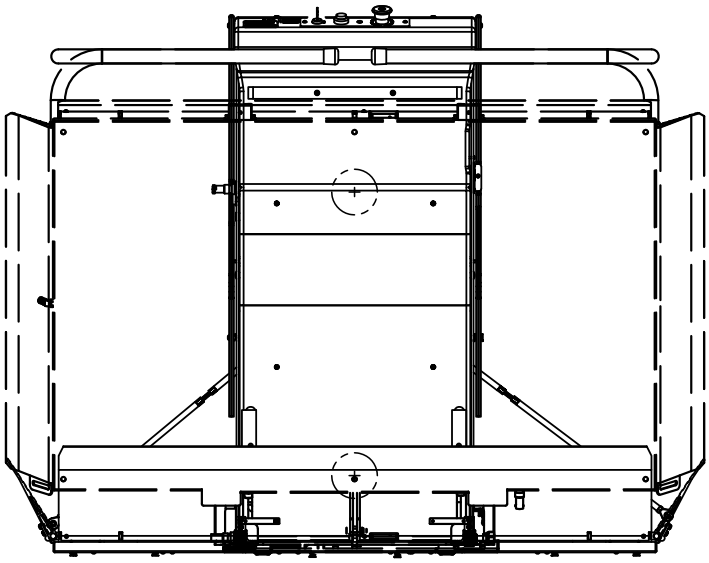

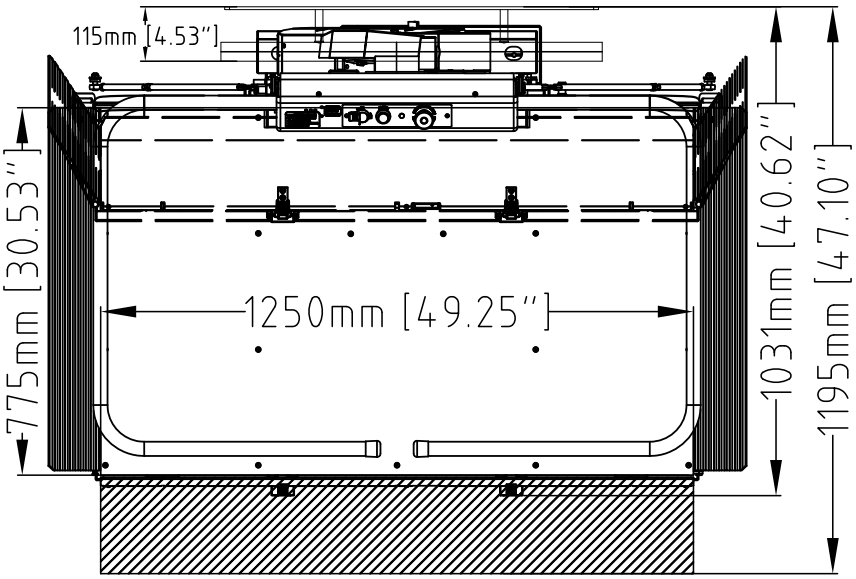

Platform – 30.5 x 49.25" (775 x 1250 mm) Sheet 3

DELTA 90 DEGREE ACCESS PLATFORM
30.5" X 49.25" [775 x 1250]

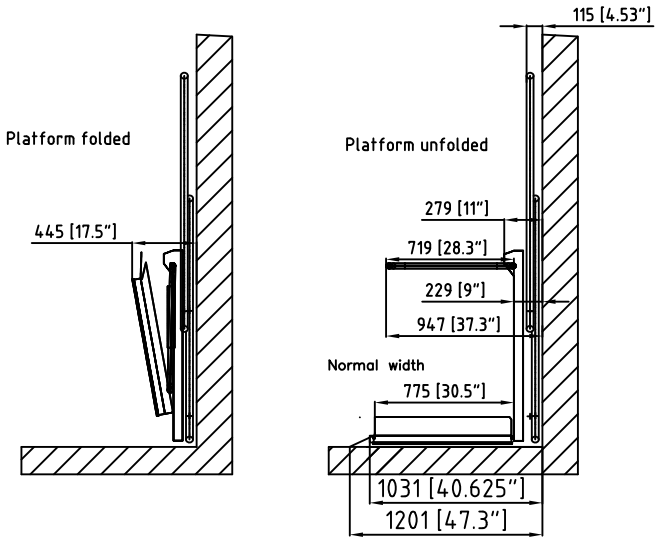

DELTA INLINE ACCESS PLATFORM
30.5" X 49.25" [775 x 1250]

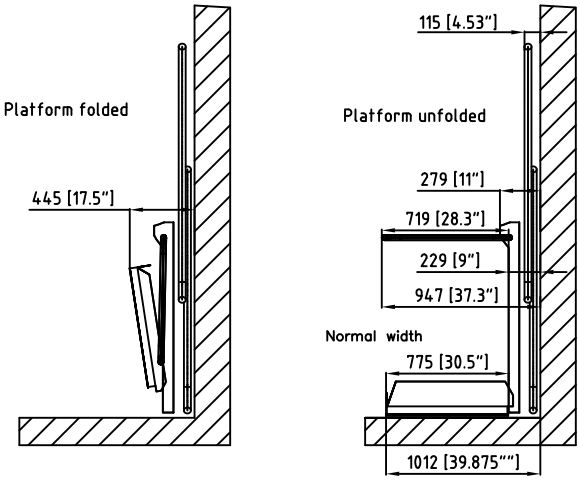

NOTES: An extra 1" of width is required to fold/unfold the ramp in tight areas.
Post-mounted units need 3.5" more width.

Platform inline – 28.5 x 44" (724 x 1118 mm) Sheet 1

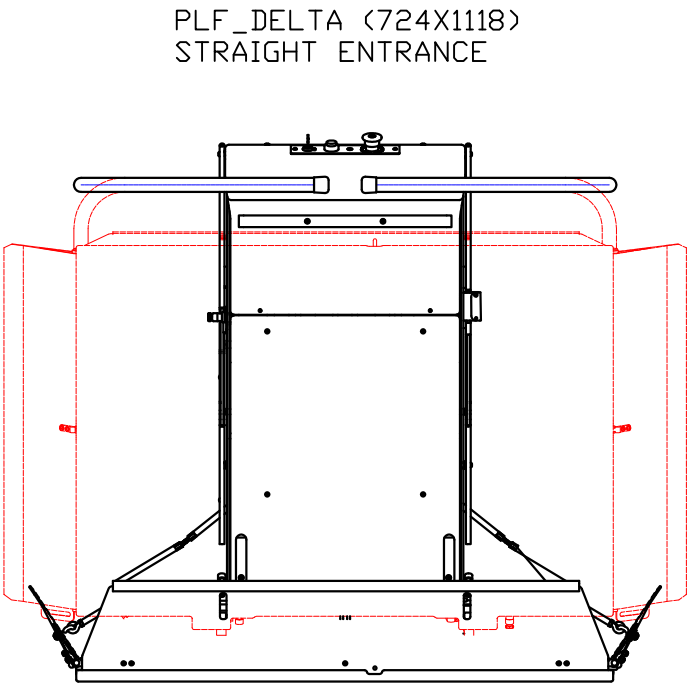

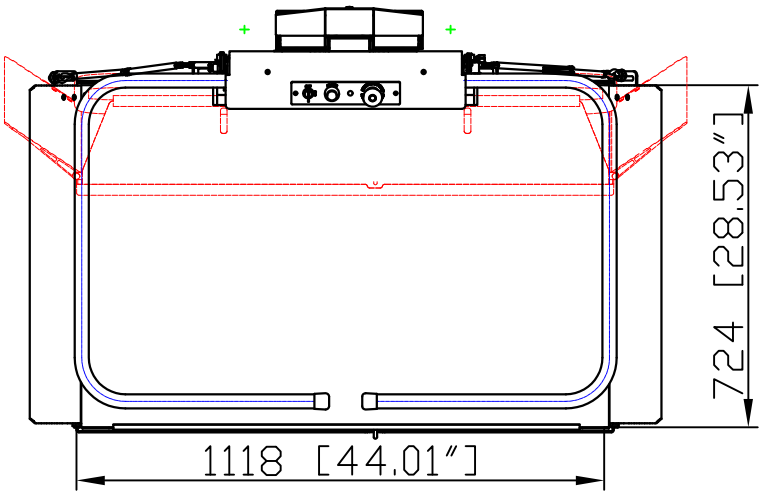

Platform 90 degree – 28.5 x 44" (724 x 1118 mm) Sheet 2

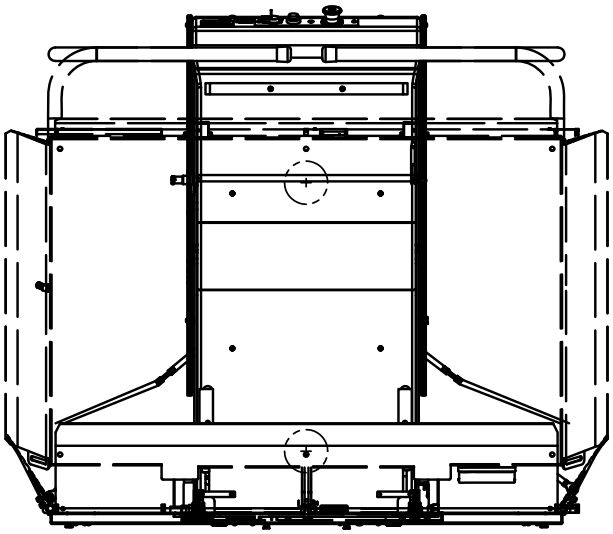

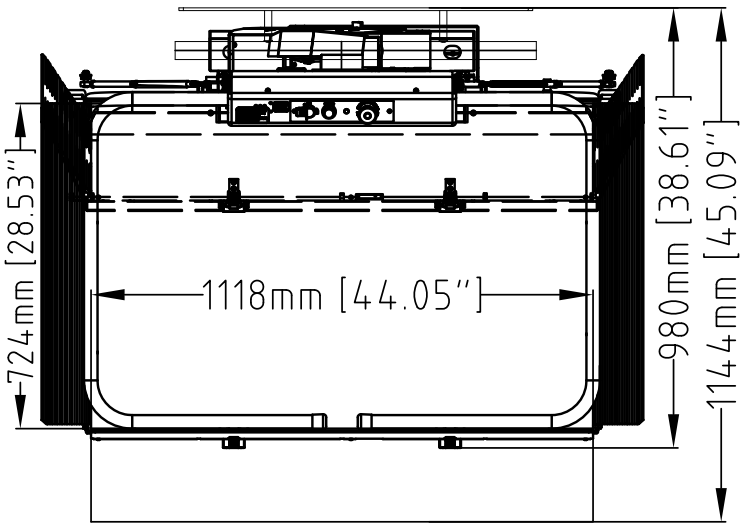

Platform – 28.5 x 44" (724 x 1118 mm) Sheet 3

DELTA 90 DEGREE ACCESS PLATFORM
28.5" X 44" [724 x 1118]

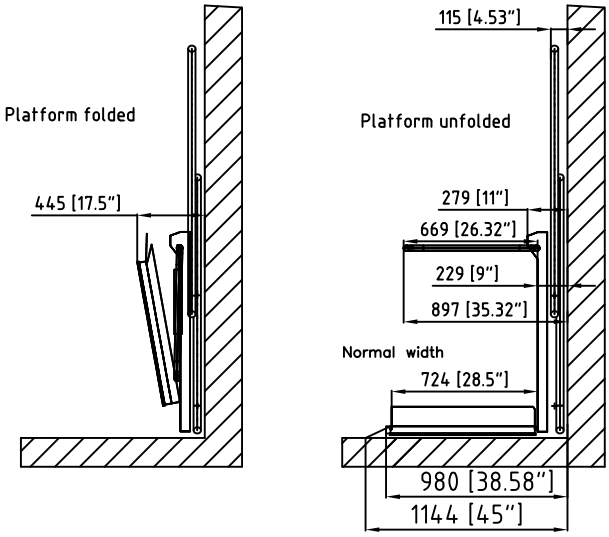

DELTA INLINE ACCESS PLATFORM
28.5" X 44" [724 x 1118]

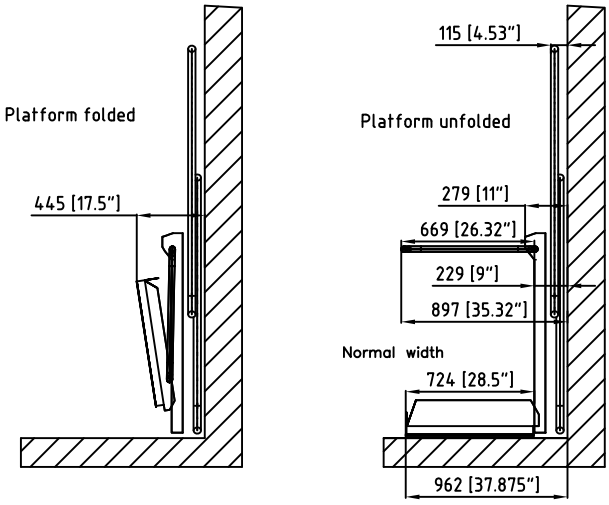

NOTES: An extra 1" of width is required to fold/unfold the ramp in tight areas.
Post-mounted units need 3.5" more width.

Platform inline – 28.4 x 35.5" (720 x 900 mm) Sheet 1

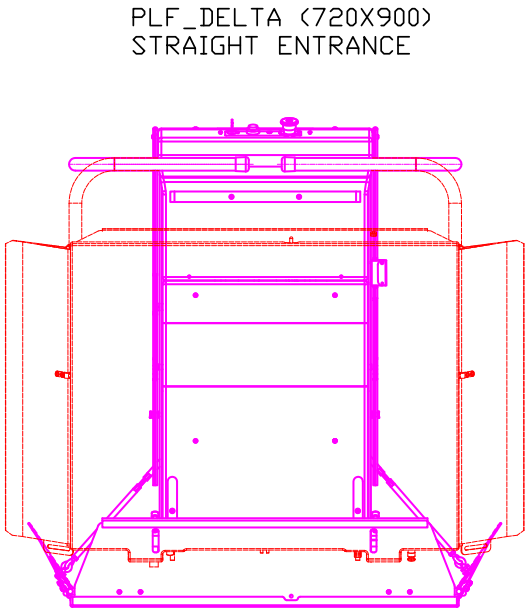

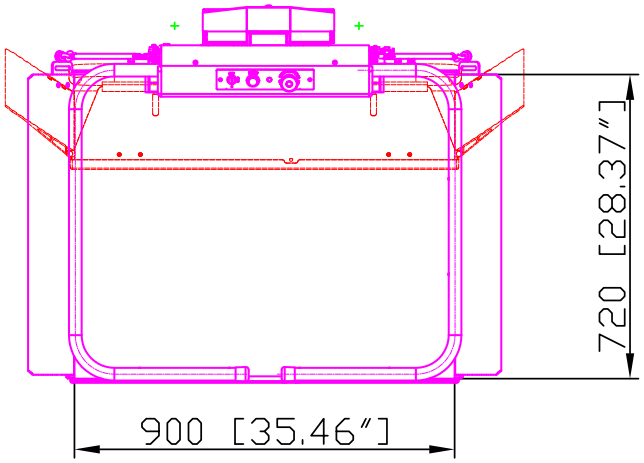

Platform 90 degree – 28.4 x 35.5" (720 x 900 mm) Sheet 2

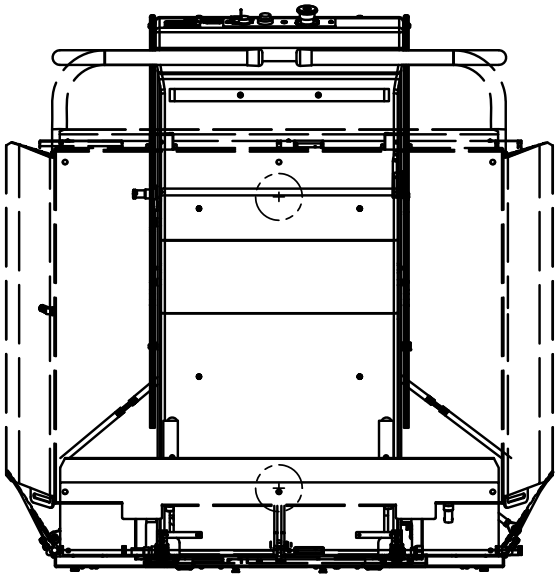

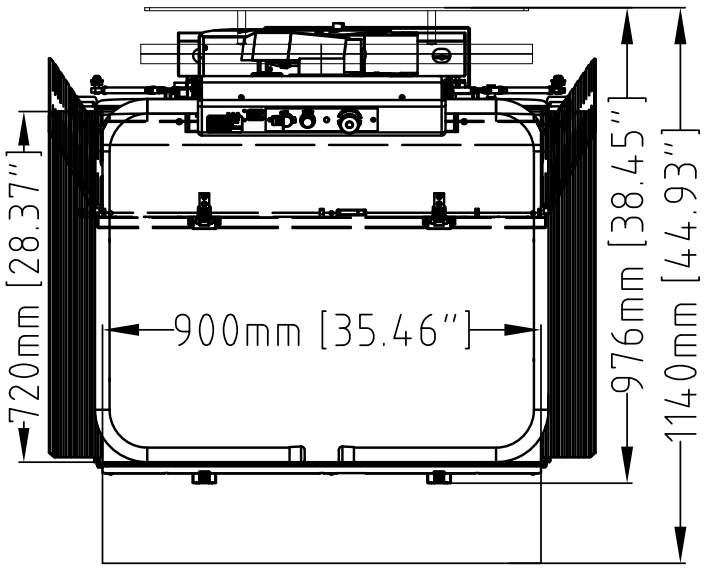

Platform – 28.4 x 35.5" (720 x 900 mm) Sheet 3

DELTA 90 DEGREE ACCESS PLATFORM
28.35" X 35.43" [720 x 900]

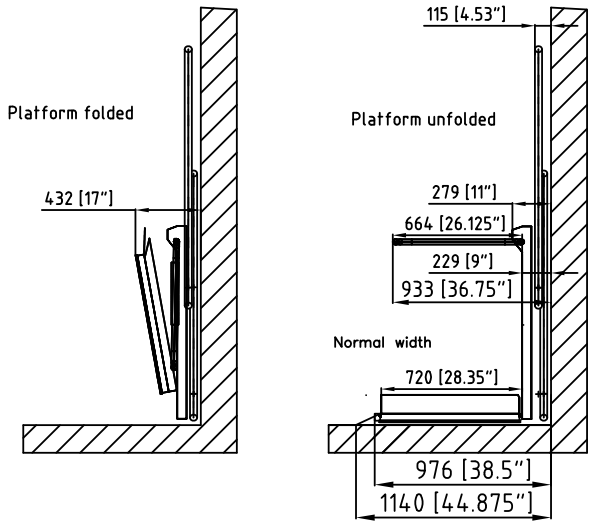

DELTA INLINE ACCESS PLATFORM
28.35" X 35.43" [720 x 900]

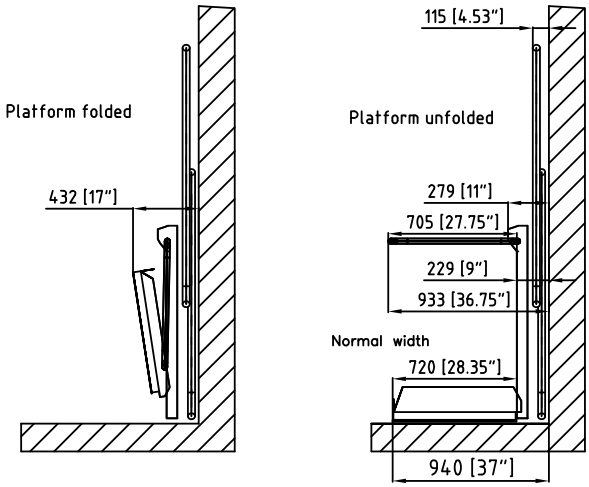

NOTES: An extra 1" of width is required to fold/unfold the ramp in tight areas.
Post-mounted units need 3.5" more width.

Platform inline – 26.5 x 36" (673 x 914 mm) Sheet 1

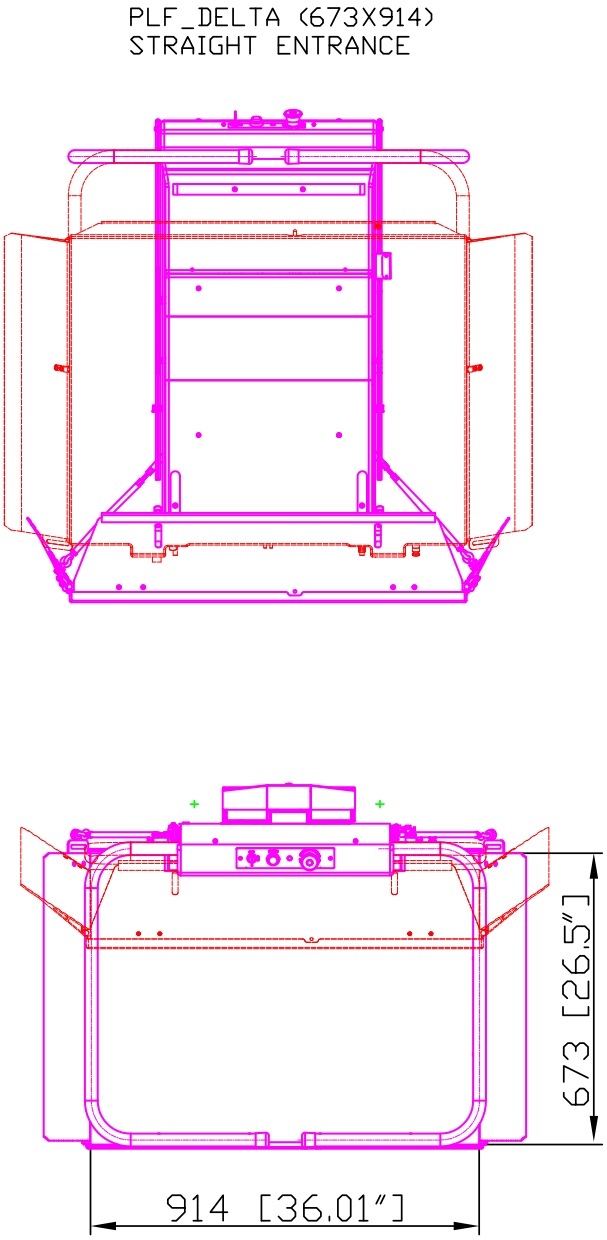

Platform 90 degree – 26.5 x 36" (673 x 914 mm) Sheet 2

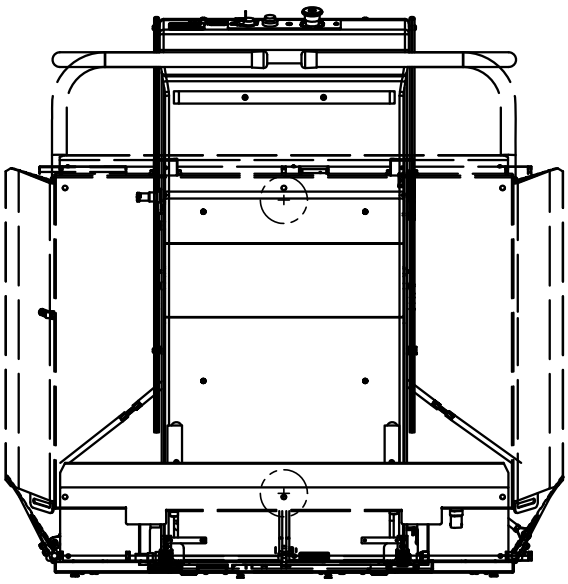

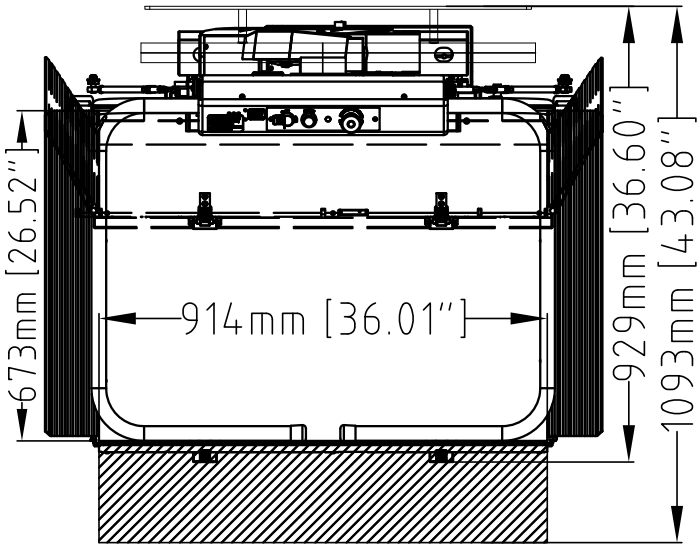

Platform – 26.5 x 36" (673 x 914 mm) Sheet 3

DELTA 90 DEGREE ACCESS PLATFORM
26.5" X 36" [673 x 914]

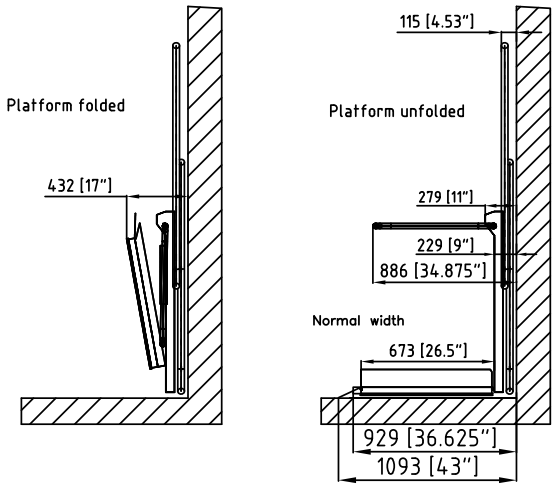

DELTA INLINE ACCESS PLATFORM
26.5" X 36" [673 x 914]

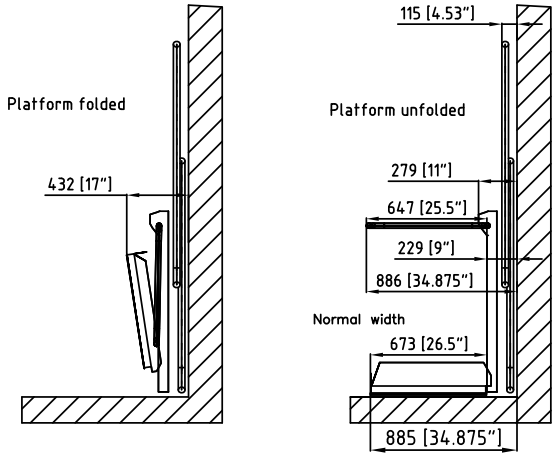

NOTES: An extra 1" of width is required to fold/unfold the ramp in tight areas.
Post-mounted units need 3.5" more width.

Platform inline – 32 x 47.25" (810 x 1200 mm) Sheet 1 (Australia Only)

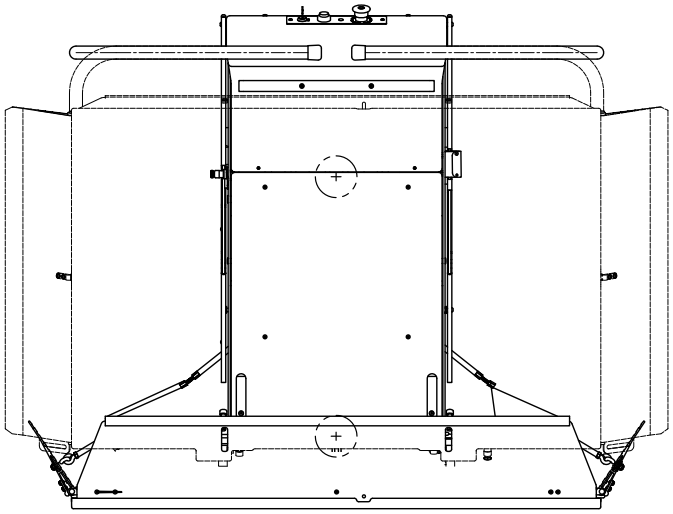

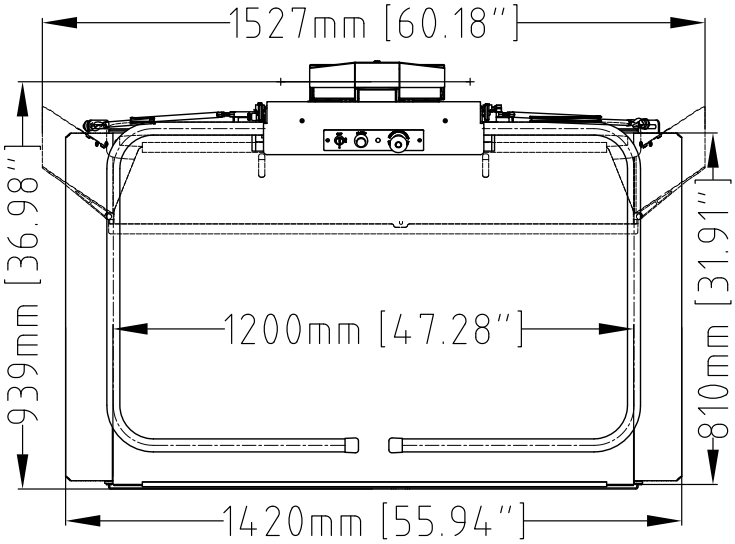

Platform 90 degree – 32 x 47.25" (810 x 1200 mm) Sheet 2 (Australia Only)

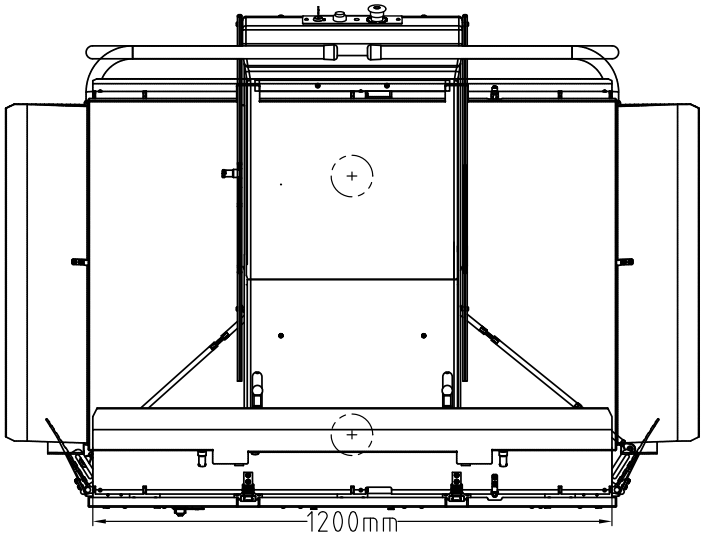

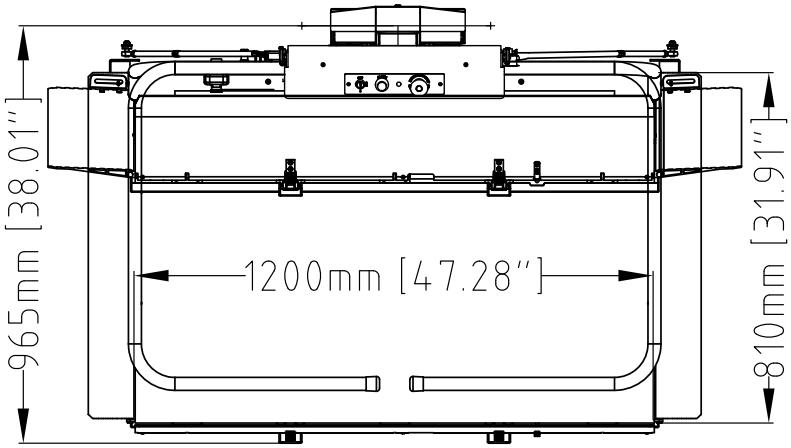

Platform – 32 x 47.25" (810 x 1200 mm) Sheet 3 (Australia Only)

DELTA 90 DEGREE ACCESS PLATFORM
810 x 1200

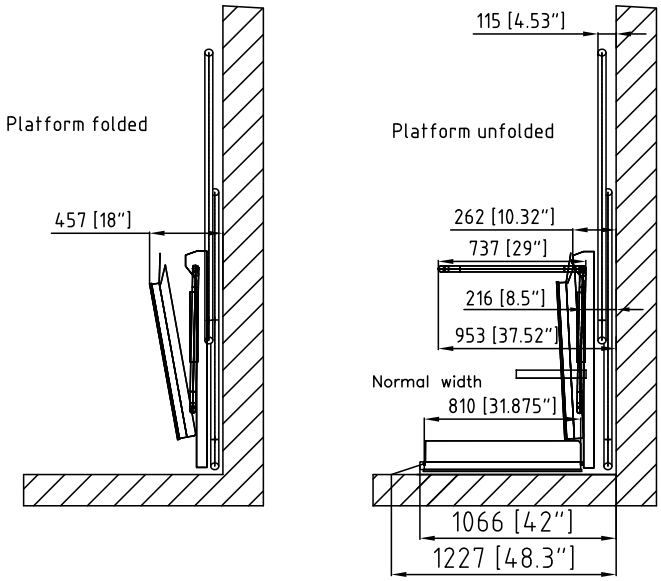

DELTA INLINE ACCESS PLATFORM
810 x 1200

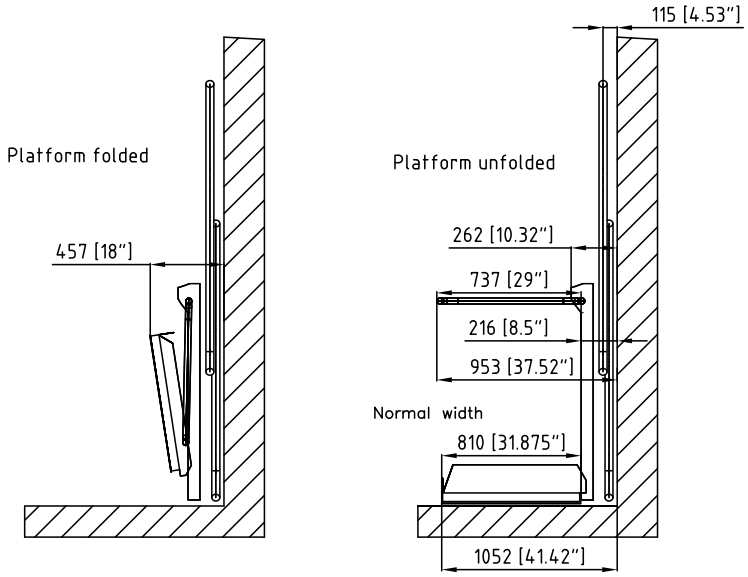

NOTES: An extra 1" of width is required to fold/unfold the ramp in tight areas.
Post-mounted units need 3.5" more width.

Seat dimensions

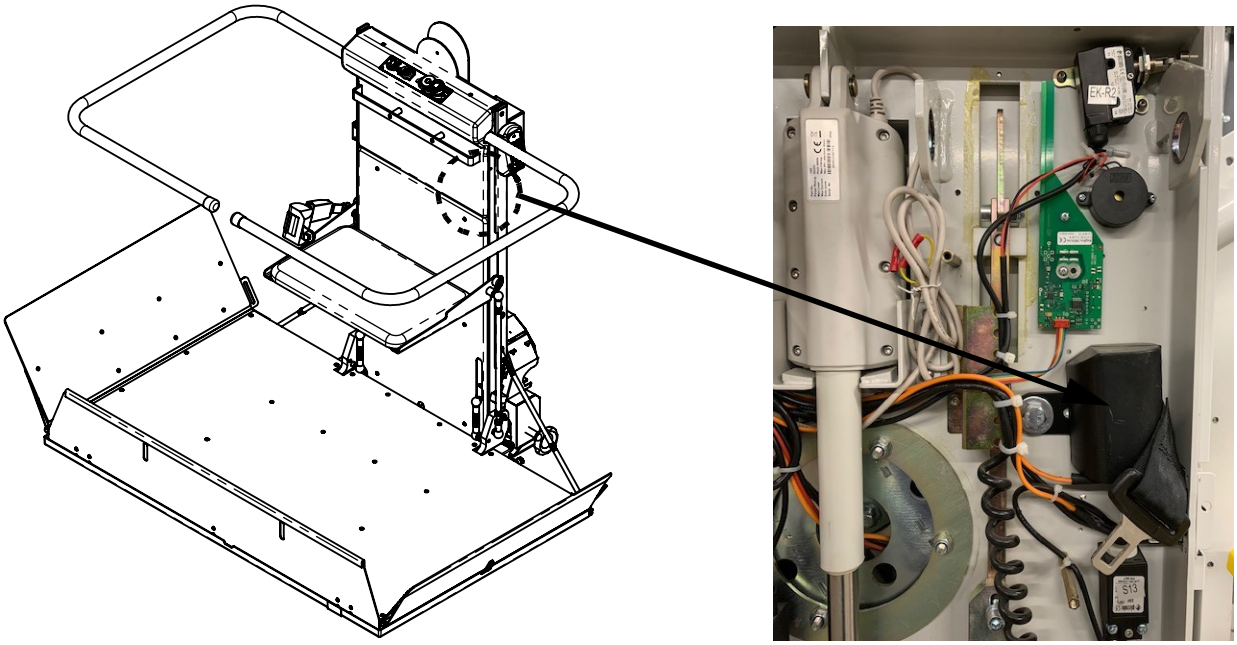

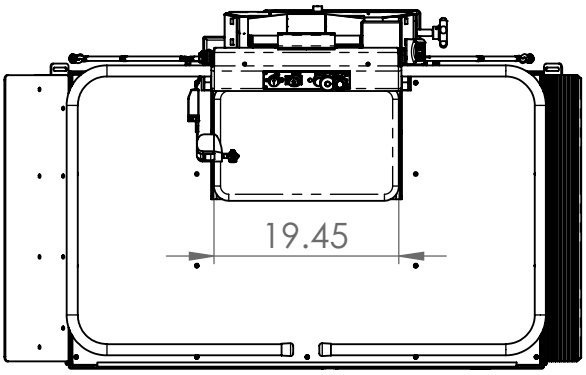

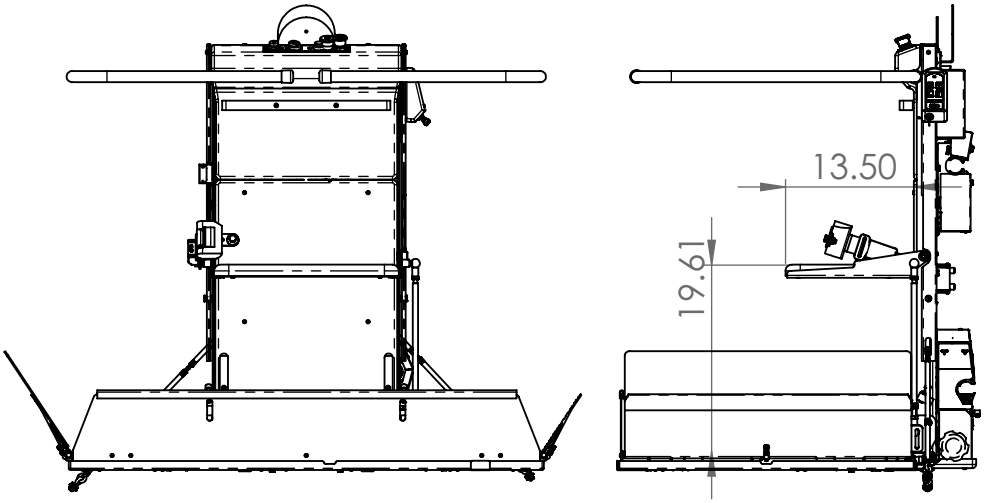

Miscellaneous - FOUR BUTTON HALL CALLS

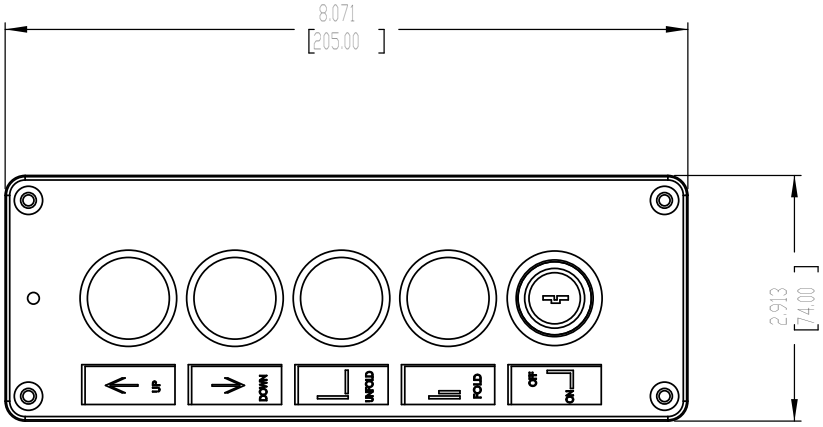

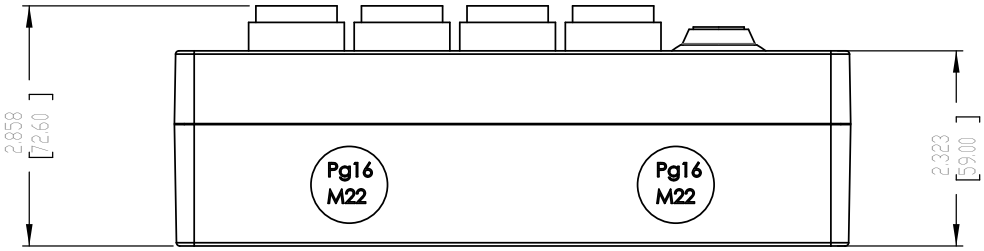

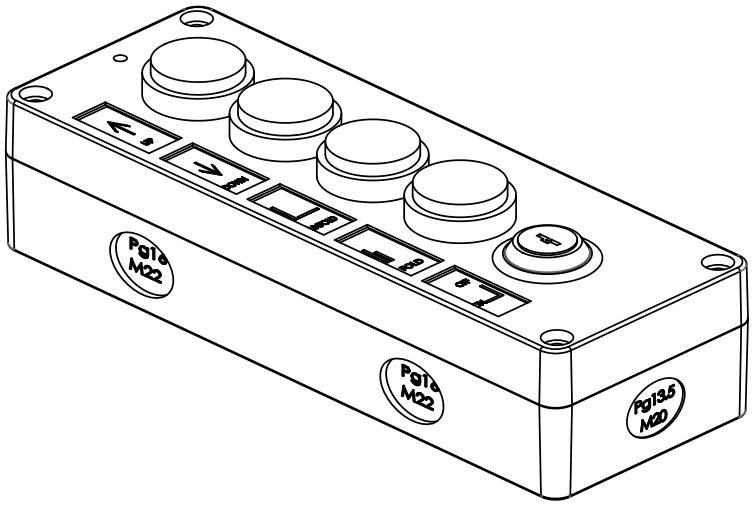

Miscellaneous - BASE PLATE FOR POSTS DELTA/OMEGA

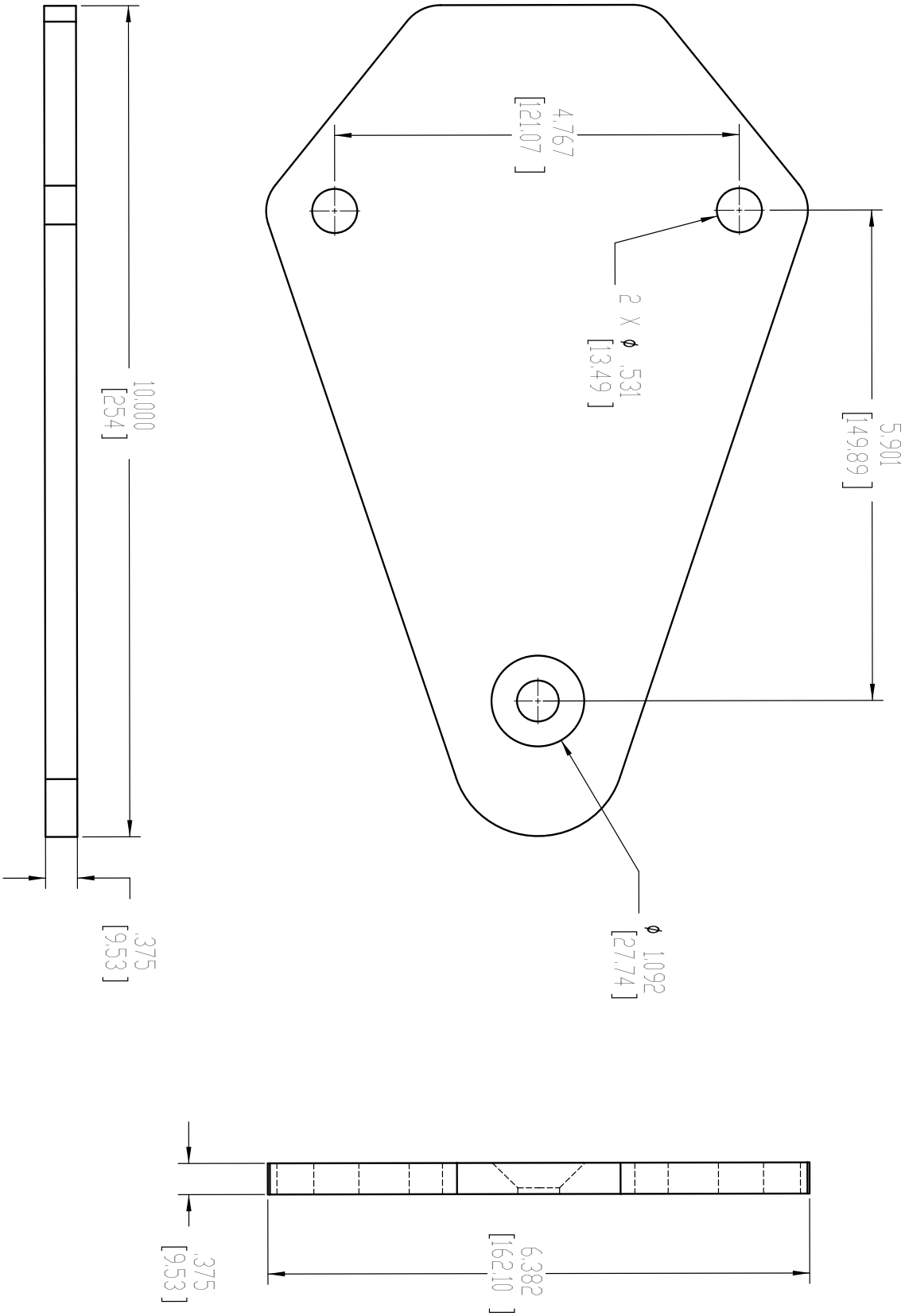

Miscellaneous - THREE BUTTON HALL CALL

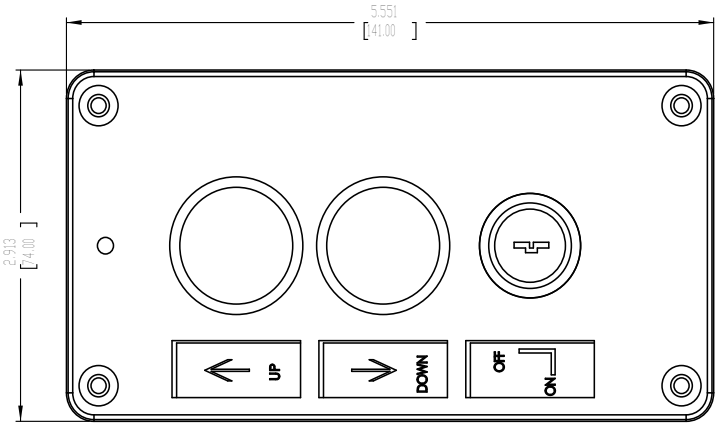

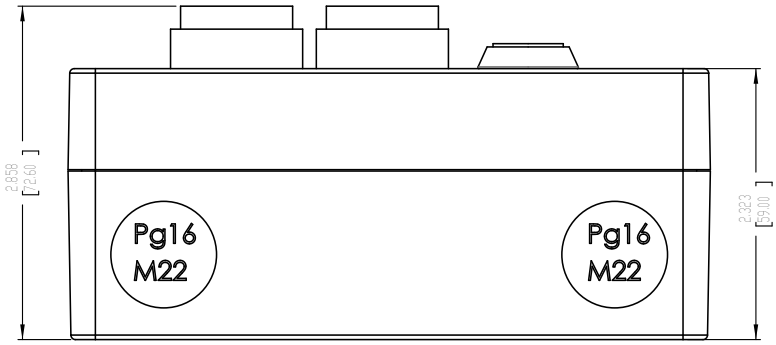

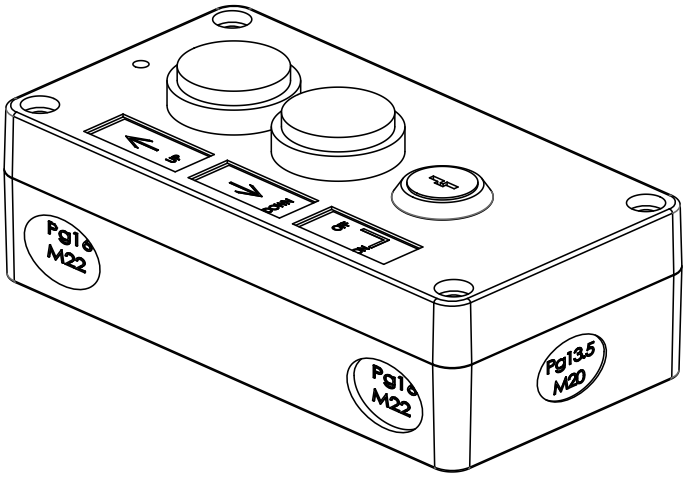

Find more design resources at:

savaria.com

CAD drawings

SpecWizard

Continuing education calendar

Savaria Concord Lifts, Inc.
2 Walker Drive Brampton ON L6T 5E1 Canada

savaria.com

©2022 Savaria Corporation